All PacketExpert™ Hardware Platforms - Ethernet Tester

1 Gbps, 2.5Gbps, 10 Gbps

GL Communications Inc.
818 West Diamond Avenue - Third Floor, Gaithersburg, MD 20878
Phone: (301) 670-4784 Fax: (301) 670-9187 Email: info@gl.com
Website: https://www.gl.com

PacketExpert™ 10GX - Portable Unit (PXN100)

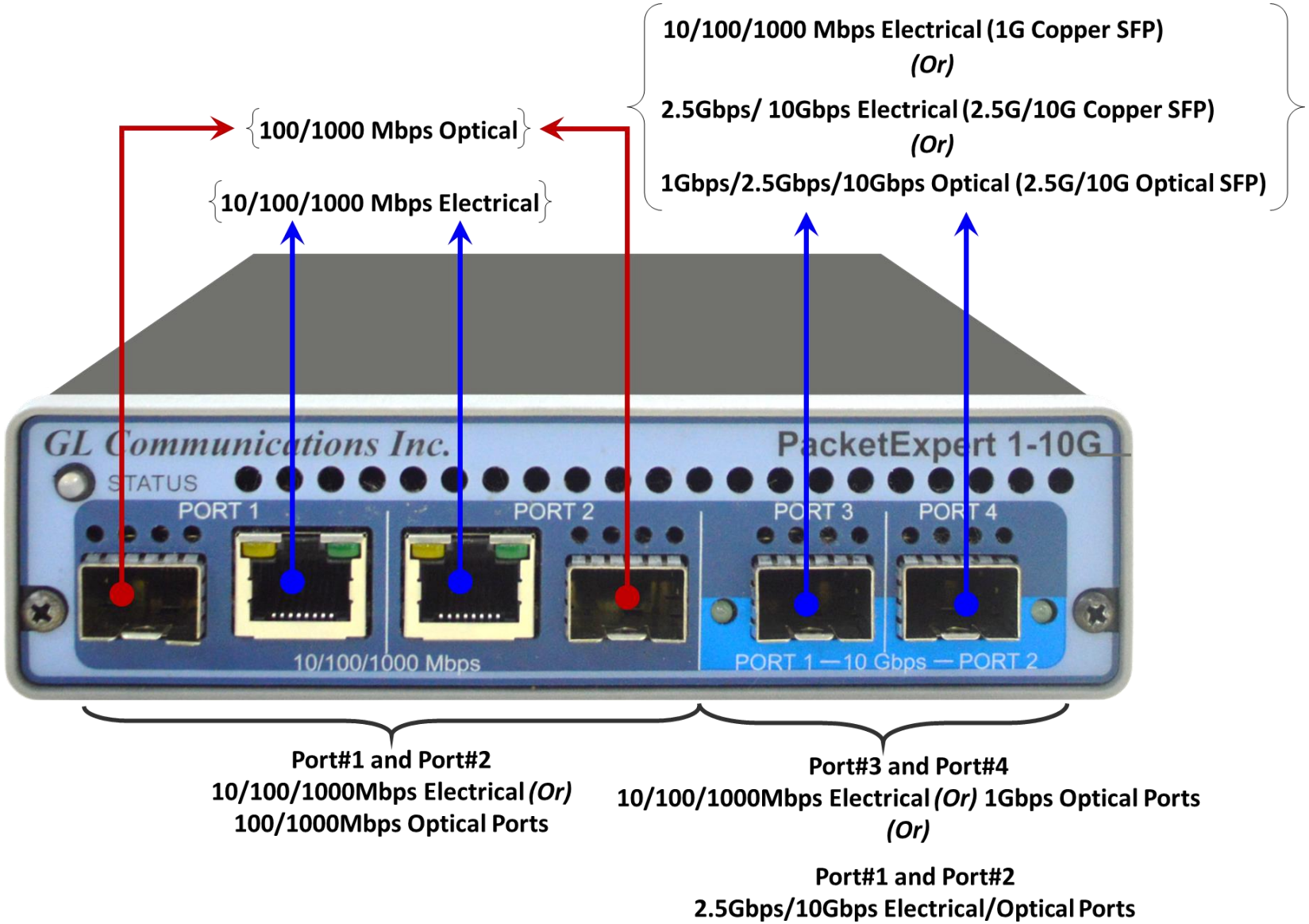

GL Communications

PacketExpert™ 10GX- 1U Rack Option (PXN104)

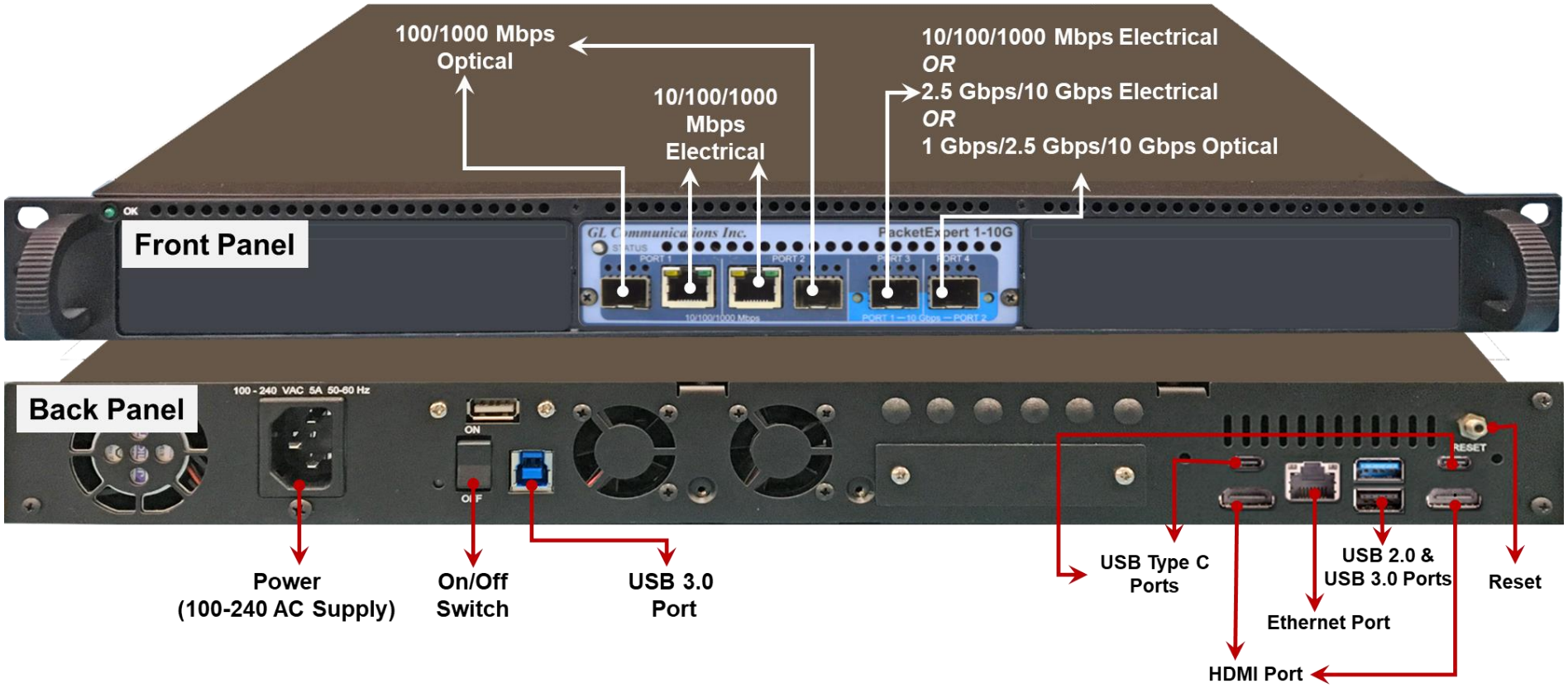

- 19” rack option, w/ Embedded Single Board Computer (SBC)
- **SBC Specs**: Intel Core i3 or optional i7 NUC Equivalent, Win® 11 Pro 64-bit Operating System,

USB Type C Ports, Ethernet 2.5GigE port, 256GB Hard drive, 8G Memory (Min), USB 3.0 and 2.0 Ports, ATX Power Supply.

GL Communications

mTOP™1U Rack Option with 12 TTL

12 Port TTL Trigger

GL Communications

PacketExpert™ 10GX (1G, 10G) -(PXN112, PXN124)

PacketExpert™ SA (PXN112)

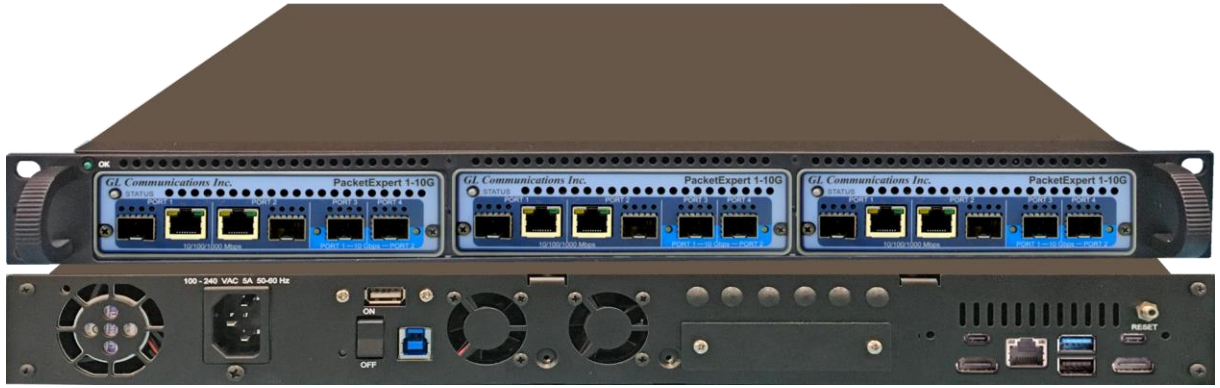

PacketExpert™ SA (PXN124)

PacketExpert SA (PXN112) is a 12-Port PacketExpert™ 19" 1U Rackmount enclosure includes 12-Port PacketExpert™ 10GX w/ MT001 and 3x PXN100 units.

PacketExpert SA (PXN124) is a 24-Port PacketExpert™. 19" 2U Rackmount enclosure includes 24-Port PacketExpert™ 10GX w/ MT001, MT002 and 6x PXN100 units.

SBC Specifications:

- Intel Core i3 or optional i7 NUC Equivalent
- Win® 11 Pro 64-bit Operating System,
- USB Type C Ports, Ethernet 2.5GigE port
- 256GB Hard drive, 8G Memory (Min),
- USB 3.0 and 2.0 Ports, ATX Power Supply.
- Two HDMI ports

PacketExpert™ 10GX mTOP™ Rack Unit (PXN112)

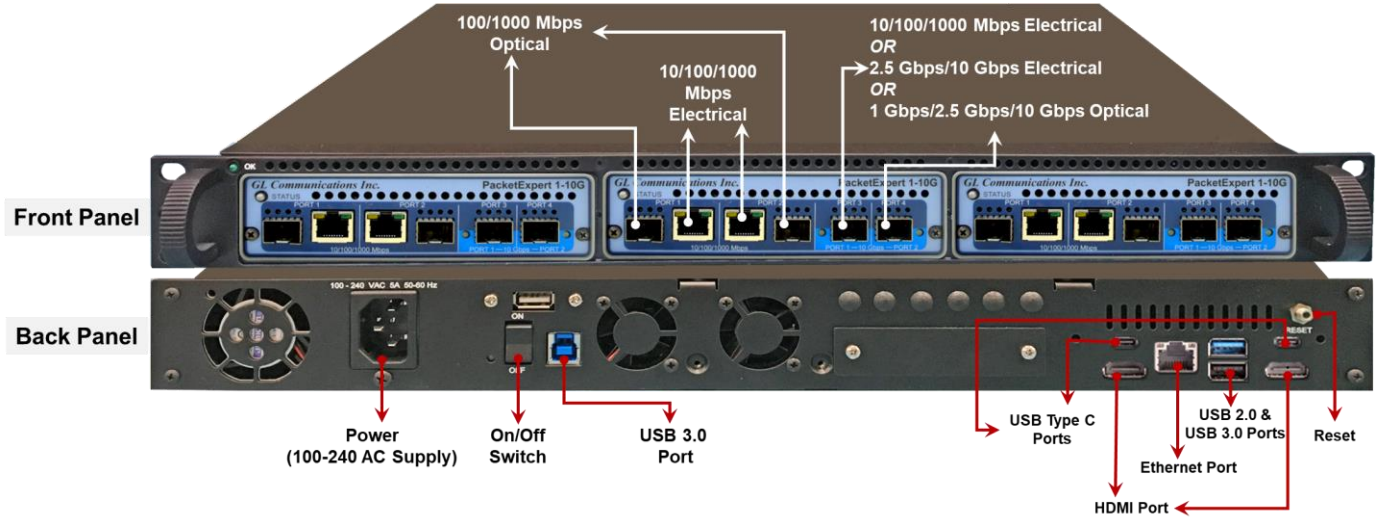

- Protocols:
  - RFC 2544 compliance
  - ITU-T Y.1564 (ExpertSAM)
- Power: +9 volts, 2.2 Amps
- Temperature:
  - 0° C to +50° C (only up to operating altitude of 5000 feet, and for Optical SFPs only i.e. Non-Electrical SFPs)
  - +5° to +40° C (for operating altitude up to 10,000 feet, and for both Electrical and Optical SFPs)
- Bus Interface : USB 2.0
- Interfaces:
  - 4 x 1G Base-X Optical OR 10/100/1000 Base-T Electrical
  - 2 x 10G Base-SR, -LR -ER Optical/Electrical
  - 2 x 100 Mbps Base-FX optical interface
  - Single Mode or Multi Mode Fiber SFP support with LC connector
  - 2.5 Gbps Electrical/Optical ports
  - Optional 4-12 Port SMA Jack Trigger Board (TTL Input/Output)
  - Embedded Single Board Computer (SBC)

PacketExpert™ SA 1G - 1U Rack Option (PXE104)

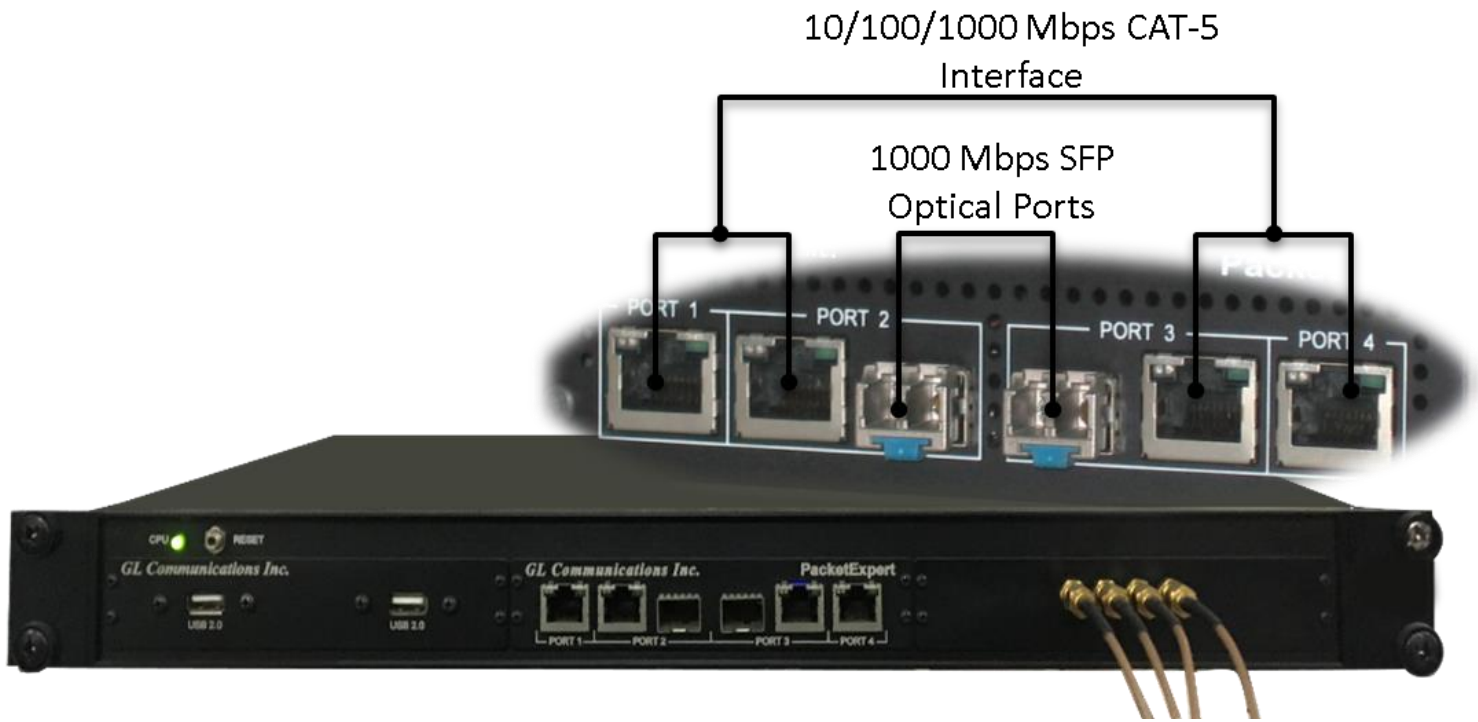

- 19” rack option, w/ Embedded Single Board Computer (SBC)
- SBC Specs: Intel Core i3 or optional i7 NUC Equivalent, Win® 11 Pro 64-bit Operating System, USB Type C Ports, Ethernet 2.5GigE port, 256GB Hard drive, 8G Memory (Min), USB 3.0 and 2.0 Ports, ATX Power Supply, Two HDMI ports

GL Communications

PacketExpert™ SA 1G - (PXE112, PXE124)

1U mTOP™ PacketExpert™ (PXE112)

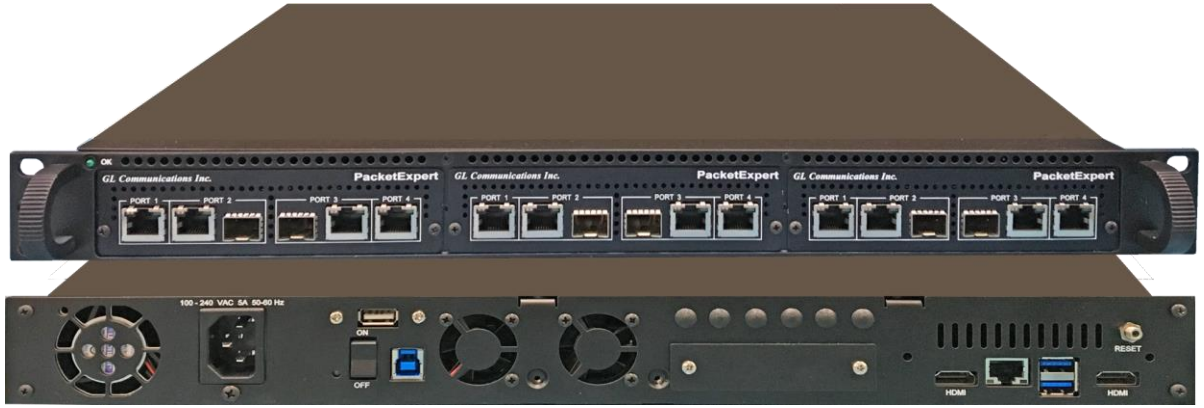

Stacked 1U mTOP™ PacketExpert™ (PXE124)

PacketExpert SA (PXE112) is a 12-port PacketExpert™ 19" 1U Rackmount Enclosure. (If options, then x 3).

PacketExpert SA (PXE124) is a 24-Port PacketExpert™ 19" Stacked 1U Rackmount Enclosures. (If options, then x 6).

SBC Specifications:

- Intel Core i3 or optional i7 NUC Equivalent,
- Windows® 11 64-bit Pro Operating System
- USB 3.0 and USB 2.0 Ports, ATX Power Supply
- USB Type C Ports, Ethernet 2.5GigE port
- 256 GB Hard drive, 8G Memory (Min)
- Two HDMI ports

MT001-mTOP™ 1U Rack Mount Enclosure w/SBC (intel core i3)
MT001E-mTOP™ Rack Mount Enclosure w/SBC (intel core i7)

GL Communications

mTOP™ Probe Units

mTOP™ Probe PacketExpert™ 10GX

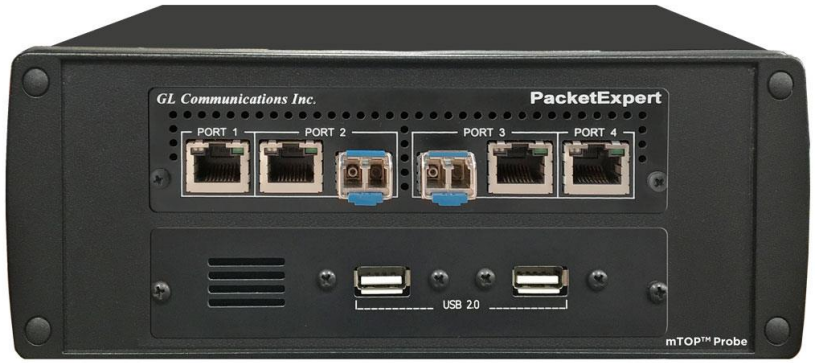

mTOP™ Probe PacketExpert™ 1G

mTOP™ Probe Rear Panel

- +5° to +40° C (for operating altitude up to 10,000 feet, and for both Electrical and Optical SFPs)
- Intel Core i3 or optional i7 NUC Equivalent
- Windows® 11 64-bit Pro Operating System
- USB 3.0 and USB 2.0 Ports
- +12V, 3Amps Power Supply
- USB Type C Ports, Ethernet 2.5GigE port
- 256 GB Hard drive, 8G Memory (Min)
- Two HDMI ports
- MT005 - mTOP™ Probe (Portable Stand-alone) (intel core i3)
- MT005E- mTOP™ Probe (Portable Stand-alone) (intel core i7)

GL Communications

Thank You